The Muttsee lake has been integrated into the hydropower generation solution of the Linth-Limmern power plants since 1968.
Image: Axpo Power AG

A battery in the mountains

Swiss pumped storage plant relies on Stauff Form Evo

Only two years after commissioning, leaks were found on the hydraulic stainless steel tubes in one of Europe's largest pumped storage plants in the Swiss Alps. The reason: Conventional stainless steel cutting ring fittings had not been able to withstand the strong vibrations in some of the exposed areas of the power plant. Kraftwerke Linth-Limmern AG now relies on the tube forming system from Stauff.

The Limmern pumped storage plant is situated in the Swiss Alps around 100 km from Zurich, at an altitude of 1700 m. In the latest expansion stage of the power plant, 160 m3 of water per second can be pumped from the Limmernsee lake to the Muttsee lake 650 m higher up. This lake then functions like a battery: When power demand increases, the water is released through turbines to generate electric power.

This latest expansion stage alone has a pump and turbine power of 1000 MW, bringing the total power of Kraftwerke Linth-Limmern AG to 1520 MW.

Leak-free under extreme conditions

Two years after the step-by-step commissioning in 2016/17, leaks were detected on hydraulic lines during maintenance work. Uwe Bröllos is a Key Account Manager at Fluidtec AG in Kreuzlingen, authorised Stauff partner for Switzerland: "When leaks were found in the Limmern pumped storage plant, I was consulted as an expert on hydraulic line systems. The damage analyses have shown that cracks had formed in some of the cutting ring tube connections." These were caused by the permanent vibrations acting on the hydraulic lines in the power plant.

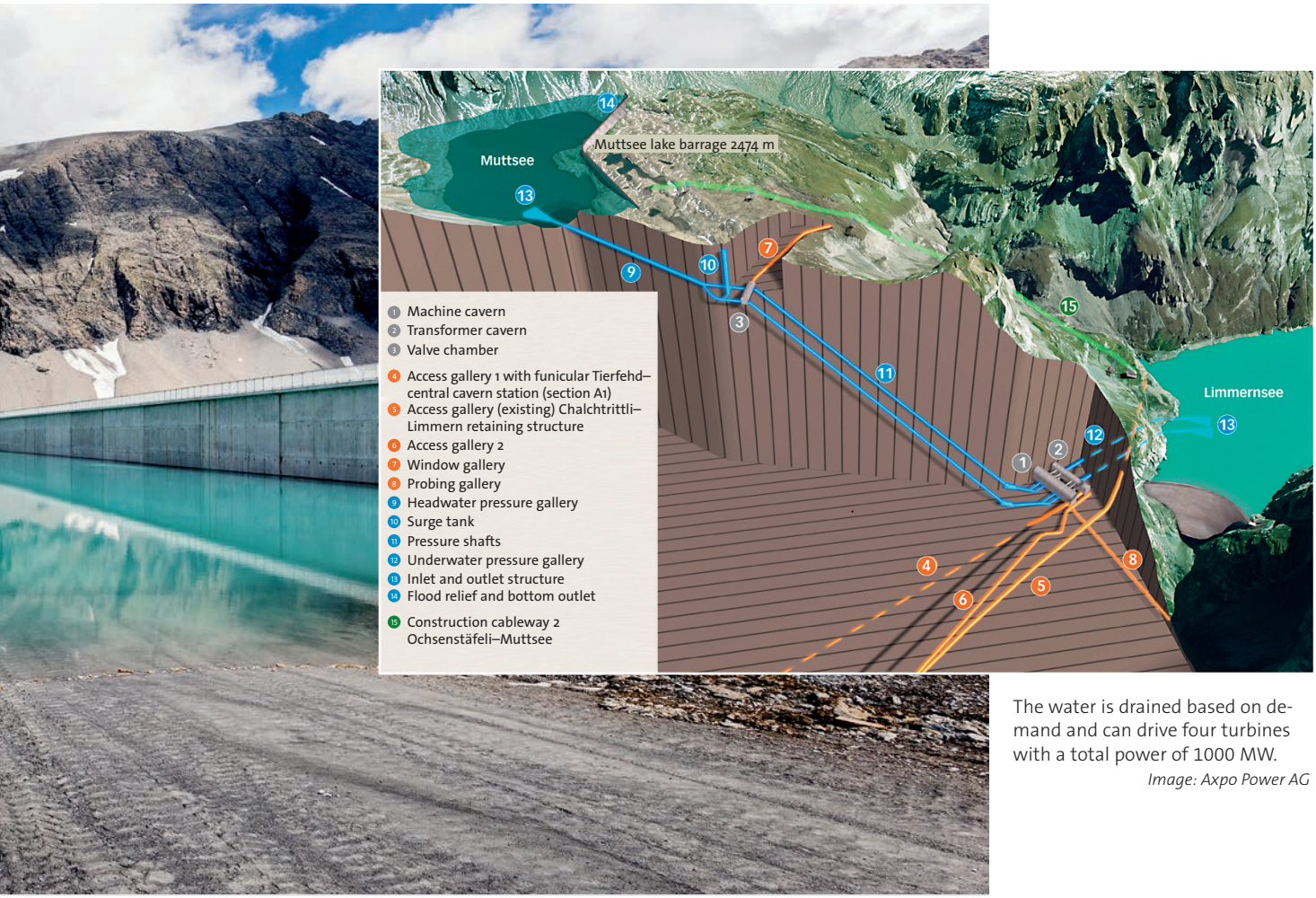

The water is drained based on demand and can drive four turbines with a total power of 1000 MW.
Image: Axpo Power AG

Tube forming instead of cutting rings

24° tube connectors with cutting rings are usually highly resistant and are regarded to be the universal standard for reliably connecting metric tubes with external diameters between 4 and 42 mm in hydraulic systems without leaks. "For the extreme conditions in the Limmern pumped storage plant, however, it would have been advisable to use a different connection solution from the outset – tube forming." Uwe Bröllos recommends Stauff Form, which was developed specifically for high pressure applications and strong vibration loads by Stauff, the German manufacturer and developer of all components for hydraulic line systems.

Update for Stauff Form

In 2021, Stauff updated its forming system that had been used successfully in international mechanical and plant engineering since 2015: The previously used metal adapter ring with its permanently connected elastomer seal was replaced with a "simple" FKM (Viton®) seal. This is less expensive and therefore of particular interest to applications involving larger quantities, without safety being compromised. Both systems are still available and are formed with the same machines. For the changeover to Stauff Form EVO, only the tool sets have to be replaced and a software update has to be installed.

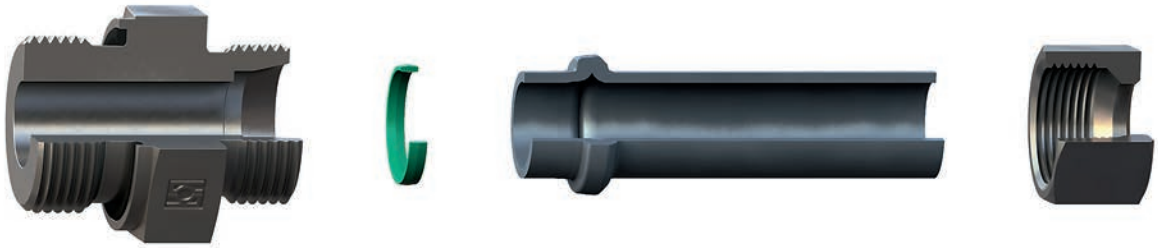

The Stauff Form EVO tube forming system is completely based on standard components and is available with the Viton seal.
Image: Stauff

Uwe Bröllos (right) from Fluidtec advises Oswald Hauser, Head of the Mechanical Systems division at the pumped storage plant (left), and his employees.
Image: Uwe Bröllos

Each of the four pump turbines in the machine cavern has a power of 250 MW.
Image: Axpo Power AG

Tube installation 4.0 – networked machines

In practice, the Stauff forming machines require regular software updates. With the latest generation of machines, this is exceptionally straightforward: Updates can be transmitted online. This is made possible by a communication module with SIM card integrated into the machine. For example, the machine history and parameters can be viewed via an online service and analysed together with the account manager. The cause of a malfunction can be quickly identified and the quality of the forming process can be maintained at a high level. Detailed documentation of the forming processes carried out can be used by the customer as proof of correct assembly. The data exchange with Stauff's own cloud is encrypted in both directions, reliably protecting the data against third-party access, misuse and manipulation.

Tube forming: the "premium class" of tube connections

The principle: The Stauff Form machine is used to reshape the tube end in such a way that a positive-locking connection is created when a conventional fitting body and union nut are installed. A Viton seal additionally protects the only conceivable leakage path. So while the tube material is merely reshaped with Stauff Form, a cutting ring connection is created by a metal ring with two edges cutting – as the name already indicates – into the tube surface when the union nut is tightened. This cutting into the material limits the vibration resistance. The forming system, on the other hand, has a higher pull-out strength, which offers a safety advantage under extreme conditions such as strong hydraulic shocks and vibration loads as in the Limmern pumped storage plant. This is a crucial aspect for machine and plant manufacturers in particularly safety critical sectors, such as ship building, offshore plants or cranes and lifting equipment.

Operational safety and environmental protection have priority

Oswald Hauser, Head of the Mechanical Systems division at Kraftwerke Linth-Limmern AG, and his maintenance team decided to use Stauff Form in 2020. Since then, the stainless steel cutting ring connectors in the hydraulic line system have been replaced with formed connections. "Our priorities are operational safety, preventing leaks and preventing environmental damage. The stainless steel tubes carry up to 18,000 litres of oil that must not leak into the plant or into nature." The use of high strength tube connectors also reduces the expenditure for service and maintenance significantly. After all, there are dozens of kilometres of lines at the Limmern pumped storage plant that have to be checked at closely spaced maintenance intervals

Introduction to analogue and digital operation

The support from Fluidtec played an important role in his decision for Stauff Form: "We are in very good hands with Mr Bröllos. We have been working together in other functional areas for many years. He has often helped us out of a jam, for example when we needed spare parts at short notice." Oswald Hauser wants to particularly highlight the induction into the forming machine, the "heart" of Stauff Form. Stauff employees travelled from the headquarters in the German Sauerland region to train the installation personnel at the power plant. Additional advantages of the forming system became evident during the training: Another design feature of Stauff Form is that excessive or incomplete tightening are virtually impossible. The forming machine is easy to operate and the tool changer for different tube diameters is straightforward. The introduction into how to use the Cloud connection and the remote service function was also very compelling. Here, users can benefit from the close cooperation with the project managers at the Stauff headquarters in Germany. Oswald Hauser: "Changing to Stauff Form is an important technical step for us and a also benefit with regard to work processes, reliable assembly and maintenance effort." *rso*■

Stauff Form machine in front of the impeller of a pump turbine *Image: U. Bröllos*

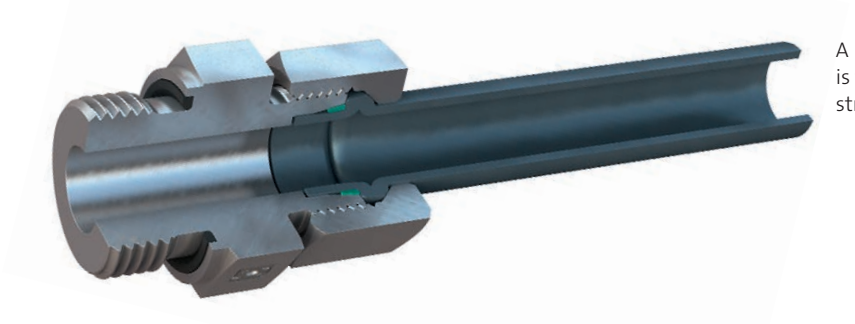

A positive-locking connection is tear-proof even under high strain. *Image: Stauff*

STAUFF Form EVO tube forming system

Stauff Form EVO has been designed as a standard for seamless cold-drawn precision steel tubes and stainless steel tubes with dimensions between 6x1.5 mm and 42x4 mm in the Light Series and 6x1.5 mm and 38x6 mm in the Heavy-Duty Series. Parameters for other materials are available on request and can also be stored in the system by the manufacturer if required – alternatively also via the optional integrated module for a cloud connection.

The system is based on standard components and consists of only four key components: The Stauff Form EVO sealing ring is pushed onto the tube end with the contour previously formed with the machine. This creates a positive-locking connection that provides a reliable, permanent and maintenance-free seal when used in combination with a conventional fitting body with a 24° inner cone and an ISO 8434-1 compliant union nut. All other components in the Stauff Connect product range are manufactured with a high quality zinc/nickel finish as a standard. With more than 1200 hours of resistance to red rust or base metal corrosion in the salt spray chamber as per DIN EN ISO 9227, this offers reliable corrosion protection. Even after transport, processing and installation of the components, they still exceed the requirements defined in the VDMA standard sheet 24576 for tube connections for the highest corrosion protection class K5.

The sealing of the only possible leakage path is achieved primarily with the Stauff Form EVO sealing ring, which is specifically positioned between the surface of the tube and the 24° inner cone of the fitting body during assembly. FKM (Viton) is used as the sealing material.

This allows the Stauff Form EVO tube forming system to be used in applications with high temperatures or aggressive media without any issues. Thanks to the combined metal-elastomer seal, the components can also be used at low temperatures down to -35° C without restrictions – the same as for NBR (Buna-N). The sealing profile has a particularly large cross-section in order to provide a reliable and permanent seal even in the event of a poor tolerance position between the tube and the fitting. Any potential mistakes during installation on the formed tube end are consistently avoided thanks to the symmetrical profile of the sealing ring. The sealing effect is supported by the system pressure of the hydraulic system, making the Stauff Form tube forming system equally suitable for high-pressure applications.

Assembly is completed by tightening the union nut to the point where the force increases noticeably. The final step is a further tightening by about 15 to 20° beyond this point.

These tube connections can be released as often as required and reassembled without causing wear, as any damaging expansion of the 24° inner cone of the fitting body can be technically excluded. In connection with original parts from the Stauff Connect series, the Stauff Form EVO tube forming system offers a pressure resistance of up to 800 bar in the Heavy-Duty Series and 500 bar in the Light Series (with a quadruple safety factor and depending on the series, model and size of the fitting body and taking into account various factors for pressure reduction). Maximum pull-out strength can be achieved thanks to the contour shaped at the tube end.