Instruction manual

Original instructions



Mobile cutting ring pre-assembly machine

SPR PRC-H-M-E

To prevent injury and damage, read this instruction manual carefully and attentively and retain it for future reference.

6010023356 Version 2

05/06/2025

Additional instructions in other languages can be downloaded from:
www.stauff.com

Walter Stauffenberg GmbH & Co. KG

Im Ehrenfeld 4

58791 Werdohl, Germany

+49 2392 916-0

sales@stauff.com

www.stauff.com

Table of Contents

1 Information on this manual 5
1.1 Structure of the warnings 5
1.2 Structure of the operating instructions 6
1.3 Structure of the additional information 6

2 For your safety 7
2.1 Intended use 7
2.2 General safety instructions 8
2.3 Specific safety instructions 9
2.4 Tasks and duties of the operating company 9
2.5 Protective devices 10
2.6 Safety markings 10
2.7 Personnel qualification 11
2.8 Personal protective equipment 12

3 Machine description 13
3.1 Machine overview 13
3.2 Function 13
3.3 Technical data 14
3.4 Nameplate 14
3.5 Tools and product 14
3.6 Assembling area 15
3.7 Display and operating elements 15
3.7.1 Operating elements 15
3.7.2 Display 16
3.7.3 Charging state display 16
3.8 Accessories 17
3.8.1 Case 17
3.8.2 Carrying strap 17
3.8.3 Tripod (optional) 18
3.8.4 Table mount (optional) 18

4 Transport and storage 19

5 Operation 20
5.1 Safety 20
5.2 Switching on/off 20
5.3 Cutting ring assembly preparation 21
5.4 Pre-assembly 23
5.5 Rechargeable battery charging 24

6 Troubleshooting 25
6.1 Safety 25
6.2 Fault table 25
7 Maintenance 26
7.1 Safety 26
7.2 Inspection and maintenance work 26
7.3 Cleaning the machine 26
8 Decommissioning 27
8.1 Safety 27
8.2 Disposal 27
9 EC declaration of conformity 28
10 Declaration of Conformity UKCA 29
Keyword index 30

1 Information on this manual

1.1 Structure of the warnings

Warning notices are made particularly obvious via colour-shaded signal word panels. Always read the complete text of the warning notice to ensure you are fully protected against hazards.

The following signal word panels use different colours and signal words to indicate different levels of danger:

DANGER

Failure to heed this warning notice will result in serious or fatal injury.

WARNING

Failure to heed this warning notice may result in serious or fatal injury.

CAUTION

Failure to heed this warning notice may result in slight or moderate injury.

NOTICE

Failure to heed this warning notice may result in damage to property.

Warning notices always have the same structure. They contain the signal word, nature and source of the danger, the consequence of failure to heed the notice and measures designed to prevent/avoid the danger.

Example:

WARNING

Hazard of shearing off and crushing fingers

- ► Ensure before start-up that all safety equipment is properly installed and in working order!
- ► Make sure your fingers are not in the assembling area when operating the machine!

1.2 Structure of the operating instructions

Operating instructions request you to carry out an activity directly. They have an action-oriented structure. Always carry out the individual action steps in the specified order.

Operating instructions are structured as follows and are identified by corresponding symbols:

▶ Objective of the operating instruction

1. Action step

   ✓ Effect of the action step to check whether it has been carried out correctly.

2. Further action step

☑ Result of the complete operating instruction.

1.3 Structure of the additional information

The texts marked with an information symbol provide additional information and give you tips.

2 For your safety

2.1 Intended use

The cutting ring pre-assembly machine is solely designed for the mechanical pre-assembly of cutting rings on Light and Heavy Series tube ends for outside tube diameters of between 6 mm and 42 mm.

The machine is used together with assembly studs specially designed for this machine and the mechanical assembly operation.

The assembly parameters configured in the machine apply solely to the use of an original STAUFF cutting ring FI-DS-..-W3/W5 in conjunction with seamlessly drawn tube according to EN10305-4 made of E235+N and E355+N material as well as SS316Ti according to EN10216-4 and EN10216-5 tolerance class D4/T3 and the original STAUFF union nut FI-M-..-W3/W5. The stated pressure specifications apply either to steel-steel or stainless steel-stainless steel combinations.

Pre-assembly operations involving materials and material combinations that differ from the above need to be separately examined on the basis of the accumulated material in front of the first cut and optimised, if necessary, by changing the pressure parameter. The assembly result then needs to be evaluated by the machine operator in person.

Modifications, extensions or conversions are not permitted without prior discussion with the manufacturer. Such modifications can jeopardise the operational safety and are considered as non-intended use.

Incorrect use

Any use other than that stated in the „Intended Use“ chapter is not permitted.

The cutting ring pre-assembly machine must not be used:

- Where high-voltage lines and gas piping is to be found
- In potentially explosive areas
- In rain or during thundery or humid ambient conditions
- Together with a rechargeable battery which the manufacturer has not authorised

2.2 General safety instructions

Safety instructions help you to prevent injuries and damage to property. Ensure that you have read and understood all safety instructions in this instruction manual.

For safe working, it is not sufficient to only read the general safety instructions in this section. You must also read and follow the special safety instructions in all sections concerning your work. Note and follow also the information and instructions in the reference documents.

The following safety instructions apply generally:

- Comply with the respective relevant national and international safety regulations regarding health and safety at work.
- Operate the machine only …
  - if it is in perfect technical condition,
  - safely and aware of the hazards,
  - as intended (Section 2.1, p. 7),
  - paying attention to this instruction manual,
  - with unchanged, fully installed, properly installed and fully functional safety devices and
  - with properly installed and functioning control.
- Respect all safety markings installed on the machine (Section 2.6, p. 10).
- Wear always the required personal protective equipment (Section 2.8, p. 12).
- In case of faults or damage immediately put the machine out of orperation, until the fault is corrected (Section 6, p. 25).
- Work on electrical installations may only be carried out by qualified electricians. Work on live parts may only be carried out under the supervision of a second person.
- Be aware of the presence of possible residual energies in mechanical and electrical components.
- Use spare parts authorised by the manufacturer to replace components. Unauthorised spare parts can endanger the operating safety.

2.3 Specific safety instructions

The product is designed in line with the best technology available and the recognized safety-relevant regulations. Even so. its use can entail risks to the life and limb of the operator and third parties or damage to the product and its operating field.



Electric shock from live parts
- Switch off the machine before cleaning
- Shield the machine from moisture



Hand injuries between assembly stud and counter retainer
- Do not access the assembling area during the operation
- Wear protective gloves



Noise level up to 79 dB(A)
- Wear earmuffs during the operation.



Stress from constant strain imposed and an unhealthy posture
- Pay heed to an ergonomic posture and deployment of strength
- Use carrying strap or tripod
- Keep to the required break times

2.4 Tasks and duties of the operating company

To ensure safe operation of the machine the operating company has at least the duty …

- to ensure that the machine is only operated according to its intended use, in a proper condition, with completely assembled safety equipment and without damage.
- to define the area of use and draw up corresponding operating instructions (standard operating procedures).
- procure the respective latest version of the regulations concerning operation and to familiarise the operating personnel with these regulations.
- Instruct personnel in safe working practices and regularly check that personnel work with an awareness for safety and hazards.
- Provide the personnel with the required personal protective equipment (▸Section 2.8, p. 12).
- to ensure that the safety markings attached to the machine are always complete and fully legible.

2.5 Protective devices

Safety devices protect the operating personnel from hazards. The following is an overview of the installed safety devices.

Housing of the drive mechanisms

The electrical and mechanical drive mechanisms are inside the appliance housing and cannot be accessed by the operator.

Push button with immediate-stop function

The hydraulic cylinder is activated only when the push button is pressed. The drive is stopped when the button is released.

2.6 Safety markings

The following safety markings are attached in a clearly visible way and are legible:

Symbol	Description	Place of assembly	Number
	Warning of hand injuries on accessing the rotary head when running	Nameplate	1
	Wear protective gloves	Nameplate	1
	Wear earmuffs	Nameplate	1
	Observe the operating manual	Nameplate	1

2.7 Personnel qualification

Any work on the machine is only be carried out by qualified and authorised personnel. Personnel trained in the work involved as backed up by appropriate certificates are considered to be qualified.

Qualifications

The personnel approved for particular tasks belong to the following target groups, based on the qualification:

- **Operating personnel** have been briefed in operating the machine and in its operation. They are authorised to undertake the following jobs:
  - Operating the machine
  - Changing over the tool
  - Cleaning the outside of the machine
- All work beyond the authorisation of the operating personnel has to be conducted by **the manufacturers service personnel**.

Skilled jobs

Certain qualifications are needed for a number of jobs. Only those with the specified qualifications are allowed to perform the listed jobs.

Job	Qualification
Normal operation	Briefed operating personnel
Tool and rechargeable battery change	Briefed operating personnel
Maintenance and fault rectification on external parts	Briefed operating personnel
Maintenance and fault rectification on internal parts	Service personnel of the manufacturer

Safety briefing

All those working on the machine must be briefed as to safety at least once a year. Indispensable constituents of the briefing are:

- Personnel qualifications and authorisations
- Functionality and operating
- Area of application and ambient conditions
- Accessories for secure handling
- Personal protective equipment
- Change-over work
- Regular maintenance work

2.8 Personal protective equipment

To limit hazards during work, use the required personal protective equipment:

Symbol	PPE	Life phase	Job
	Close-fitting work clothing	all	all
	Safety shoes	all	all
	Protective gloves	Operation	All

3 Machine description

3.1 Machine overview



Fig. 1: Overview

No.	Designation	Function
1	Assembly area	Handling the workpiece
2	Carrying strap eyelet	Fastening the carrying strap
3	Pressure parameter table	Table in which parameters can be set
4	Battery	Lithium ion (18 V / 5.0 Ah)
5	Unlocking mechanism	Unlocking the unit to switch it on
6	Push-button	Extending the pressure cylinder under pressure
7	Return button	Retracting the pressure cylinder

3.2 Function

The machine assembles cutting rings onto tube ends. Tubes with a tube diameter of between 6 mm and 42 mm can be used.

The machine is used together with assembly studs which have been specially designed for mechanical assembly.

3.3 Technical data

General data	
Dimensions (L x H x W)	440 mm x 330 mm x 80 mm
Weight including hydraulic oil and battery	6.9 kg
Max. pressure	115 kN
Operating conditions and emissions	
Operating temperature	+10° to +35° C
Sound pressure level according to EN ISO 11202:2009	79 dB(A)
Total oscillation value	1.5 m/s^2

3.4 Nameplate

The nameplate is located on the right of the machine.

3.5 Tools and product

The cutting ring pre-assembly machine assembles cutting rings onto tube ends.

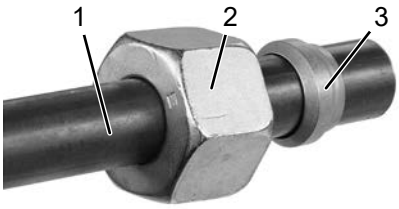

1 Tube
2 Union nut
3 Cutting ring

Fig. 2: Workpiece



Fig. 3: Assembly stud

The size is stated on a label on the assembly studs:

- the number corresponds to the outside tube diameter
- L stands for the Light Series
- S stands for the Heavy Series

The assembly parameters configured in the machine apply solely to the use of an original STAUFF cutting ring FI-DS-..-W3/W5 in conjunction with seamlessly drawn tube according to EN10305-4 made of E235+N and E355+N material as well as SS316Ti according to EN10216-4 and EN10216-5 tolerance class D4/T3 and the original STAUFF union nut FI-M-..-W3/W5. Please contact STAUFF regarding deviating tube qualities.

Please refer to the STAUFF Connect product catalogue for additional information on selecting the size.

3.6 Assembling area



1 Holding device
2 Pressure cylinder
3 Holding device spring

Fig. 4: Assembling area

The holding devices brace the cap nut against the cylinder being extended and can be pressed apart by hand.

At the pressure cylinder the required mounting socket is fastened with a clip.

3.7 Display and operating elements

3.7.1 Operating elements

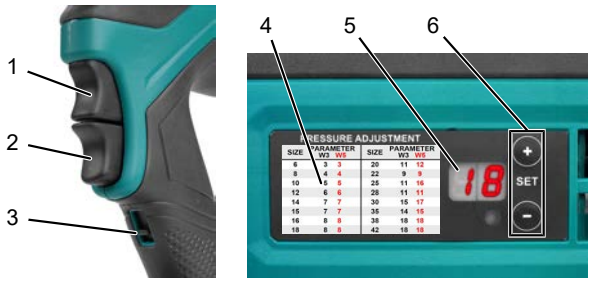

1 Return button
2 Push-button
3 Unlocking mechanism
4 Pressure parameter table
5 Parameter display
6 Parameter setting

Fig. 5: Controls on the handle and display

The machine has the following controls:

- Switching on lock
  - Up: locked
  - Down: unlocked
- Push-button to extend the pressure cylinder
- Return button to retract the pressure cylinder (also possible when the machine is switched off)

3.7.2 Display

The display shows the unit status and the program can be selected here too.

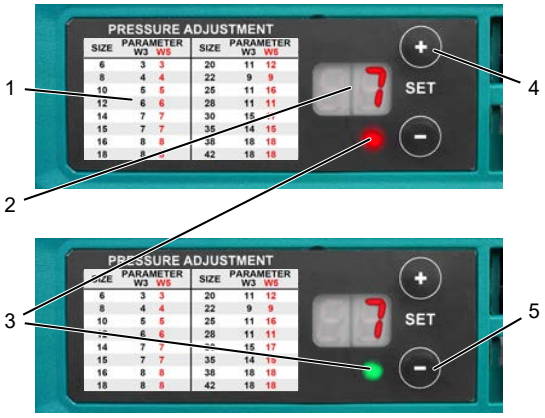

1 Pressure parameter table
2 Parameter setting value
3 Status LED
4 Increase pressure parameter
5 Decrease pressure parameter

Fig. 6: Display on the side of the unit

Status LED displays

Display	Meaning
Green flashing	Setting pressure reached
Red flashing	Setting pressure has not been reached
Red lit	Maintenance limit reached (after 15,000 cycles)
Orange lit	Maintenance limit reached soon (after 14,500 cycles)

3.7.3 Charging state display

The hand grip has its own display for the charging state of the rechargeable battery. It is activated by pressing the rechargeable battery symbol.



1 Battery symbol
2 Status display

Fig. 7: Charging state display on the battery

Meaning of the displays

Charging state	Full or almost full	Half full	Flat or practically flat
Charging state display on the battery	Green	Yellow	Off

3.8 Accessories

3.8.1 Case

In the case the machine together with its accessories can be securely stored an carried.



1 Charger
2 Assembly oil
3 Cutting ring pre-assembly machine
4 Replacement battery
5 Mounting socket (to be separately ordered)

Fig. 8: Case with accessories

3.8.2 Carrying strap

To help with the assembly, the carrying strap can be attached and mounted at the machine eyelets using the spring hooks.

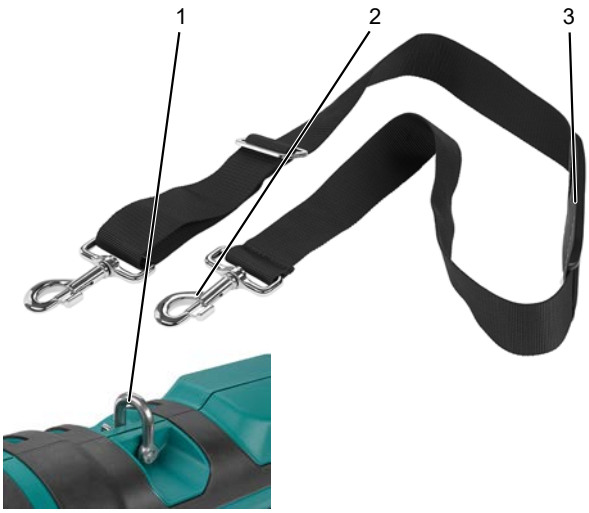

1 Eyelet
2 Spring hook
3 Shoulder padding

Fig. 9: Carrying strap

3.8.3 Tripod (optional)

The machine can also be mounted on a tripod. For this, a holding ring is fixed at the cylinder housing.



1 Cutting ring pre-assembly machine
2 Holding ring
3 Cylinder housing
4 Tripod

Fig. 10: Assembly on a tripod

3.8.4 Table mount (optional)

The machine can also be installed on a workbench using a table mount. For this, a clamping screw is fastened to the table edge and the machine secured with a holding ring on the cylinder housing.



1 Cutting ring pre-assembly machine
2 Holding ring
3 Cylinder housing
4 Tripod
5 Clamping screw
6 Holding ring screw

Fig. 11: Assembly with table mount

4 Transport and storage

The machine is supplied with a case.

The machine should always be in the case when transporting or storing it. This avoids any damage to the machine and hazards to people.



Information on dimensions and weight is available in chapter „Technical Data“ (Section 3.3, p. 14).

5 Operation

To ensure safe operation, the machine may only be operated for its intended use (Section 2.1, p. 7).

5.1 Safety

WARNING

Accessing during the pressing

Shearing off and crushing of fingers

- ► Only operate the machine with the safety equipment installed and in working order.
- ► Keep fingers away from the assembling area during the operation.

CAUTION

Weight of the hand-held machine

Injury from the machine being dropped

- ► Before the start, attach the carrying strap or use the tripod or table mount.

5.2 Switching on/off

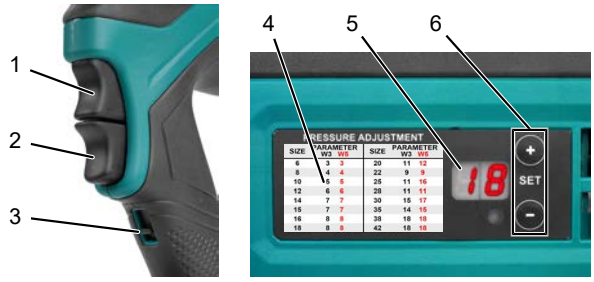

1 Return button
2 Push-button
3 Unlocking mechanism
4 Pressure parameter table
5 Parameter display
6 Parameter setting

Fig. 12: Controls on the handle and display

Switching on the machine

► Switch on the machine as follows:

1. Push down the unlocking button (3).
2. Press and hold down the push-button (2) until the number lights up in the display (5).

✓ The figure shows the parameter selected according to the pressure parameter table (4).

☑ The machine is ready-to-operate.

Switching off the machine

The machine switches itself off automatically after approx. 5 minutes if not touched.

Push up the unlocking button (3) to lock.

5.3 Cutting ring assembly preparation

Insert the assembly stud

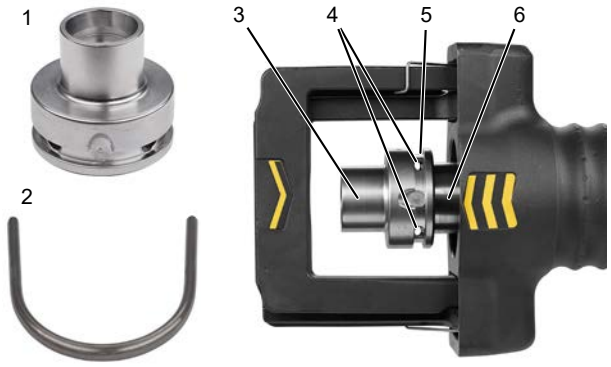

1 Assembly stud
2 Clip
3 Assembly stud (mounted)
4 Drill holes
5 Groove
6 Pressure cylinder

Fig. 13: Assembly stud on the pressure cylinder

▶ Fit the assembly stud as follows:

1. Select the assembly stud to fit the tube. Note here the differences between the Light (L) and Heavy (S) Series.
2. Unlock the push-button.
3. Keep extending the pressure cylinder with the pressure button until the clip in the groove can be reached.
4. Pull out the clip.
5. Position the assembly stud on the pressure cylinder so that the drill holes point towards the operator and lie over each other.
6. Insert the clip through the drill holes.
7. Press the return button to fully retract the pressure cylinder.

☑ The assembly stud has now been inserted

Lightly oil the assembly stud at regular intervals with the assembly oil supplied. This protect the assembly stud from wear.

Also note the safety instructions on the oil bottle!

Setting parameters

The corresponding parameter needs to be selected in the pressure parameter table depending on the type of cutting ring.

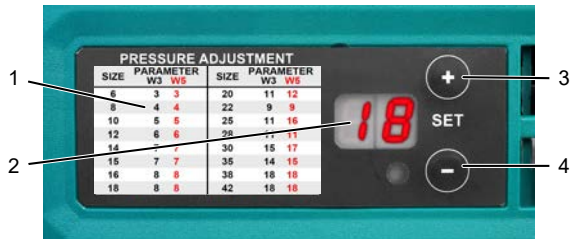

1 Pressure parameter table
2 Parameter setting value
3 Increase pressure parameter
4 Decrease pressure parameter

Fig. 14: Display

▶ Set up the pressure parameters as follows:

1. Switch on the unit (Section 5.2, p. 20)
2. Press the + or – buttons as often as needed to set the required pressure parameter.

☑ The pressure parameters are now set.

Inserting the workpiece



1 Union nut
2 Cutting ring
3 Tube end
4 Holding jaws
5 Counter retainer
6 Assembly stud

Fig. 15: Fitting the workpiece

▶ Insert the assembly stud as follows:

1. Push union nut onto the tube. The thread must face the tube end.
2. Then push the cutting ring onto the tube end. The cutting edge of the cutting ring must face the tube end.
3. Press apart the holders of the counter retaining plate.
4. Insert the tube from above into the counter retainer and place on the assembly stud. The cutting ring and union nut are located between assembly stud and counter retainer.

☑ The workpiece has now been prepared for assembly.

Fit support sleeves for thin-walled tubes in accordance with the STAUFF product catalogue!

5.4 Pre-assembly



Fig. 16: Cutting ring pre-assembly

▶ Pre-assemble the cutting ring with the machine switched on as follows:

1. Keep hold of the unit by its handle with one hand and, with the other, hold the outside of the tube.
2. **CAUTION! Hand injury during the pressing.** Keep fingers or objects away from the assembly area.
3. Press the push-button (lower button on the handle) until the LED flashes green.

   ✓ The assembly pressure has been reached. The cutting ring has been fully pressed.
4. Keep pressing the return button (lower button on the handle) until the pressure cylinder is back in its starting position.
5. Press apart the holders and remove the tube.
6. Check outcome of the cutting ring pre-assembly:
   - for the correct position of the cutting ring
   - for a tight fit
   - for unwanted deformation

☑ Pre-assembly is thus completed.



Fig. 17: Result of the cutting ring pre-assembly

Error signalling

If the red LED is flashing, the required assembly pressure has not been reached.

- You can see from the 60 to 80% accumulated material in front of the first cut whether the ring has been correctly assembled.
- Prepare a new joint and re-press if the end result is unsatisfactory.

NOTICE

Renewed pressing

Renewed pressing can lead to uncontrolled pre-assembly.

5.5 Rechargeable battery charging



1 LED lamp
2 Locking key
3 Rechargeable battery

Fig. 18: Hand grip

A replacement battery is included in the scope of delivery. To stop interruptions to operations, the recommendation is to immediately charge any flat rechargeable battery.

▶ This is the way to charge the rechargeable battery:

1. Connect the charger to the power supply.
2. On the machine, release the locking key of the rechargeable battery and remove the battery.
3. Place the rechargeable battery into the charger.

☑ The red charging pilot lamp flashes during the charging.

1. Wait until the light of the charging pilot lamp is steady.

✓ The rechargeable battery is now fully charged.

2. Disconnect the charger from the power supply.
3. Remove rechargeable battery and insert into the machine such that its clicking into place is audible.

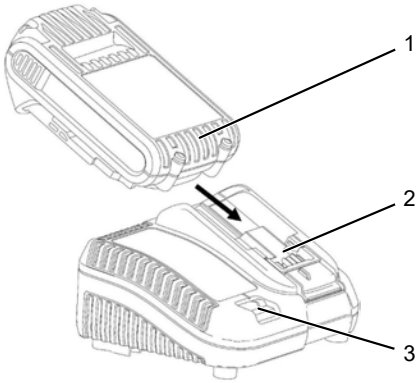

1 Rechargeable battery
2 Charger
3 Charging pilot lamp

Fig. 19: Charger

More information on the charger is in its separate instruction.

6 Troubleshooting

6.1 Safety

WARNING

Inappropriate corrective maintenance

Serious injuries or machine damage

- ► Cleaning and corrective maintenance only with the machine switched off.
- ► Non non-authorised work on the machine.

6.2 Fault table

Fault	Possible reason	Troubleshooting
Battery-operated displays do not light up as expected	Battery is not properly inserted	Re-insert the battery
	Depleted battery	Charge the battery
	Faulty LED	Contact the manufacturer
Status LED flashes red	Assembly pressure has not been reached	Check the program selection, perform pre-assembly once more
Status LED lit RED	Maintenance cycle reached	Contact the manufacturer
Pressure cylinder does not extend	Machine not switched on	Switching on the machine
	Depleted battery	Charge the battery
	Machine overheated	Switch off the machine and allow it to cool down.
	Pressure cylinder is jammed	Move pressure cylinder back and forward a few times
	Another cause	Contact the manufacturer
Pressure cylinder does not retract	Pressure cylinder is jammed	Move the pressure cylinder forward and back a few times
	Another cause	Contact the manufacturer
Holders do not adequately clamp the tube	Holder spring faulty	Contact the manufacturer
Hydraulic oil leaking	Leak in the hydraulic system	Take the machine out of service and contact the manufacturer
Battery does not charge or charges insufficiently	Battery or charging station faulty	Read through the battery instructions and/or contact the battery manufacturer

7 Maintenance

7.1 Safety

WARNING

Inappropriate corrective maintenance

Serious injuries or machine damage

- ▶ Cleaning and corrective maintenance only with the machine switched off.
- ▶ Non non-authorised work on the machine.

7.2 Inspection and maintenance work

The mobile cutting ring pre-assembly machine is largely maintenance-free and if it is properly handled it will retain its functionality across its entire life cycle. However, the following needs to be carried out regularly:

- Before using, examine the machine for any external damage
- Clean the machine after use
- Check LED displays

Red status LED

Return the machine to the manufacturer for maintenance if the red status LED is continuously lit.

7.3 Cleaning the machine

The machine and its components have to be cleaned after each use.

▶ How to clean the machine:

1. Use a cotton cloth to clean the surfaces.
2. Employ water with a grease-dissolving, non-caustic cleaning agent. Do not allow any moisture to get into the cylinders.
3. Remove stubborn dirt with a suitable cleaning agent.
4. Apply corrosion protection to metallic component parts.

Corrosion protection

Apply a light oil film as corrosion protection to the moving machine parts after removing any stubborn dirt with a cleaning agent and after a lengthy stoppage.

8 Decommissioning

8.1 Safety

CAUTION

Work on the hydraulic system

Eye injuries from ejected hydraulic oil

- ► Depressurize the machine!
- ► Only Walter Stauffenberg GmbH&Co.KG is to carry out work involving opening up the machine!
- ► Wear your personal protective equipment incl. goggles for all work undertaken on the hydraulic system!

8.2 Disposal

Electrical equipment in the EU is not permitted to be disposed of with household waste to avoid waste harmful to the environment, and efficiently and sustainably use raw material resources. Units that carry the WEEE Symbol need to be returned to recycling centres, your dealer or the manufacturer for recycling at the end of their service life.



Fig. 20: WEEE symbol

9 EC declaration of conformity

as per EC Machinery Directive 2006/42/EC, Appendix II 1.A (Official Journal of the European Union EU L157/24 date 09/06/2006)

Manufacturer: Walter Stauffenberg GmbH & Co. KG

Im Ehrenfeld 4, 58791 Werdohl, Germany

Product: Mobile cutting ring pre-assembly machine

Type: SPR-PRC-H-E

The manufacturer declares in own responsibility that the product is in conformity with all applicable provisions as well as all relevant essential health and safety requirements as specified in the directive 2006/42/EC on machinery (Official Journal of the EU L157/24 dated 09/06/2006).

The product also complies with Directive 2014/30/EU regarding electro-magnetic compatibility (Official Journal of the European Union L96/357 of 29.03.2014).

The protection objectives set forth in Low Voltage Directive 2014/35/EU (Official Journal of the European Union L96/357 of 29.03.2014) have been complied with in accordance with Annex I No. 1.5.1 of Machinery Directive 2006/42/EC.

The following harmonised standards were applied:

EN ISO 12100:2010-11	Safety of machinery - General principles for design - Risk assessment and reduction
EN ISO 4413:2010	Hydraulic fluid power – General rules and safety requirements for systems and their components
EN ISO 14118:2018	Safety of machinery – Prevention of unexpected start-up
EN 60204-1:2018	Safety of machinery – Electrical equipment of machines – Part 1: General requirements

Name and address of the person authorised to compile the technical file:

Alexander Aul, Head of Design and Development,
Walter Stauffenberg GmbH&Co.KG
Im Ehrenfeld 4, 58791 Werdohl, Phone: +49 2392 / 916 229

Werdohl, 16.5.'25

Carsten Krenz, General Manager

10 Declaration of Conformity UKCA

Manufacturer: Walter Stauffenberg GmbH & Co. KG

Im Ehrenfeld 4, 58791 Werdohl, Germany

Product: Mobile cutting ring pre-assembly machine

Type: SPR-PRC-H-E

Authorised Represantative in the UK:	STAUFF UK Ltd. 500, Carlisle Street East, Off Downgate Drive Sheffield, S4 8BS, United Kingdom

The manufacturer declares under sole responsibility that the product complies with the following regulations:

- Supply of Machinery (Safety) Regulations 2008

The following harmonised standards were applied:

EN ISO 12100:2010-11	Safety of machinery - General principles for design - Risk assessment and reduction
EN ISO 4413:2010	Hydraulic fluid power – General rules and safety requirements for systems and their components
EN ISO 14118:2018	Safety of machinery – Prevention of unexpected start-up
EN 60204-1:2018	Safety of machinery – Electrical equipment of machines – Part 1: General requirements

Werdohl (Germany), 16.5.'25

Carsten Krenz, General Manager

Keyword index

A

Assembly area 13

C

Carrying strap 17
Carrying strap eyelet 13
Case 17
Charging state display 16
Cutting ring 14

D

Declaration of Conformity 28
Display elements 15
Disposal 27

F

Fault 25
Fault table 25

H

Holding device 15

I

Incorrect use 7
Intended use 7

O

Operating company, obligations 9
Operating elements 15
Operation
- End 20
- Start 20

P

Parameter display 15, 20
Parameter setting 21
personal protective equipment 12
Personnel 11
Pressure cylinder 15
Pressure parameter table 13
Protective devices 10
protective equipment 12
Push-button 13, 15

Q

Qualification 11

R

Rechargeable battery 16
Return button 13, 15

S

Safety 7
Safety devices 10
Safety instructions 8
Safety markings 10
Signal word 5
Signal word panels 5
Switching off 20
Switching on 20

T

Technical data 14

U

Union nut 14
Unlocking mechanism 15

W

Warnings 5

Walter Stauffenberg GmbH & Co. KG

Im Ehrenfeld 4

58791Werdohl, Germany

+49 2392 916-0

If you have any queries, thoughts or criticism about your product or this documentation, please send them to us.