STAUFF®

SWG-WG



SWG-WG

Operating Manual

After-sales service for Germany:

Walter Stauffenberg GmbH & Co. KG
Im Ehrenfeld 4
58791 Werdohl
GERMANY

Phone. **+49 (0) 23 92 / 916 - 0**
Fax **+49 (0) 23 92 / 25 05**
E-Mail **sales@stauff.com**
Web **www.stauff.com**

SWG-WG Operating Manual Issue 2019-10
Translation of the Original Operating Manual

Please keep the manual in a safe place for future reference.

Transmission and duplication of this document, dissemination and notification of the contents are not permitted unless expressly approved.

All rights, errors and technical amendments reserved.

© Walter Stauffenberg GmbH & Co. KG

Dear Customer,

Many thanks for buying a stud welding machine from STAUFF.

We at STAUFF wish you success at all times when working with this stud welding machine.

The high level of quality of our products is guaranteed by ongoing further development in the design, equipment and accessories. This may result in differences between the present operating manual and your product.
No claims can therefore be derived from the data, illustrations and descriptions.

We have compiled the data and information in this reference work with the greatest care, and have made every effort to ensure that the information contained in this manual was correct and up-to-date at the time of delivery. We can nevertheless give no guarantee for an absolutely error-free document.

Should you discover any errors or unclear points when reading this operating manual, please do not hesitate to contact us.

We would also be grateful for any feedback should you have any suggestions or complaints to make about our product.

Walter Stauffenberg GmbH & Co. KG

Im Ehrenfeld 4

58791 Werdohl

GERMANY

©Walter Stauffenberg GmbH & Co. KG

All rights reserved – Reprinting, in whole or in part, only with the approval of the manufacturer

Table of Contents

1 Important Safety Precautions 6

2 Symbols and Terms Used 9

3 Scope of Supply 12

4 Technical Data 13

5 Intended Use 14

5.1 Usage with STAUFF Clamps 14

6 Warranty 15

6.1 Disclaimer 15

7 Design and Function 16

8 Welding Process 17

9 Preparing the Stud Welding Gun 18

9.1 Mounting the Tripod 19

9.2 Setting the Welding Parameters 20

Adjusting Lift 22

Adjusting Spring Force 23

10 Welding 24

11 Troubleshooting 25

12 Maintenance and Care 27

12.1 Cleaning 27

12.2 Inspection and Tests 28

©Walter Stauffenberg GmbH & Co. KG

All rights reserved – Reprinting, in whole or in part, only with the approval of the manufacturer

13 Storage 29

14 Disposal 29

Declaration of Incorporation of partly completed Machinery 30

Service & Support 31

Index 32

All rights reserved – Reprinting, in whole or in part, only with the approval of the manufacturer

1 Important Safety Precautions

The target group for this manual are qualified personnel who in view of their technical training, know-how and experience and knowledge of applicable regulations are able to assess the work assigned to them and recognise potential hazards.



Danger from incorrect use

- Use the stud welding machine only for the purpose described in this manual.

Otherwise you may endanger yourself or damage the stud welding machine.

You endanger yourself and others if you operate the stud welding machine incorrectly or fail to observe the safety precautions and warnings.
This can lead to serious injury or extensive material damage.



Danger for unauthorised operating personnel

- Work with the stud welding machine only when
  - You are appropriately trained, instructed and authorised to do so, and
  - You have read and completely understood this operating manual.
- Never work with the stud welding machine when you are under the influence of
  - Alcohol,
  - Drugs or
  - Medication.



Danger from unauthorised modifications

- Never modify the stud welding machine or parts thereof without obtaining a clearance certificate from the manufacturer.

You will otherwise endanger yourself. This can lead to serious injury or extensive material damage.

©Walter Stauffenberg GmbH & Co. KG
All rights reserved – Reprinting, in whole or in part, only with the approval of the manufacturer



Danger for wearers of heart pacemakers

- Never operate the stud welding machine if you have a heart pacemaker.
- In this case, never remain in the vicinity of the stud welding machine during welding.
- Never operate the stud welding machine if persons with heart pacemakers are in the vicinity.

Strong electromagnetic fields are produced in the vicinity of the stud welding machine during welding. These fields may impair the function of the heart pacemakers.



Danger from fumes and airborne particulates

- Switch on the welding fume extractor at the place of work.
- Ensure that the room is well ventilated.
- Never weld in rooms with a ceiling height of less than 3 m.
- Observe furthermore your working instructions and the accident prevention regulations.

This will help to avoid health damage due to fumes and airborne particulates.

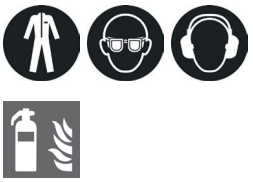

Danger from glowing metal spatter (fire hazard)

Glowing hot weld spatter and liquid splashes, flashes of light and a loud bang > 90 dB (A) must be anticipated during stud welding.

- Inform colleagues working in the immediate vicinity accordingly before starting work.
- Ensure that an approved fire extinguisher is available at the workplace.

©Walter Stauffenberg GmbH & Co. KG

All rights reserved – Reprinting, in whole or in part, only with the approval of the manufacturer





- Do not weld when wearing working clothes soiled with flammable substances such as oil, grease, petroleum, etc.
- Wear your proper protective clothing, such as:
  - Protective gloves in accordance with the relevant standard,
  - Non-flammable clothing,
  - A protective apron over your clothing,
  - Full-ear hearing protection in accordance with the relevant standard,
  - A safety helmet when welding above your head,
  - Safety shoes,
  - Safety goggles with sight glass of protection level 2 in compliance with the applicable standards and do not look directly into the light arc.
- Remove all flammable materials and liquids from the vicinity of the work area before starting welding.
- Weld at a safe distance from flammable materials or liquids. Select a safety distance large enough to ensure that no danger can arise from weld spatter.



Protection of the stud welding unit

- Protect the stud welding machine against the ingress of foreign matter and liquids caused by cutting or grinding work in the vicinity of your work area.

This will help to prolong the service life of your stud welding machine.

©Walter Stauffenberg GmbH & Co. KG
All rights reserved – Reprinting, in whole or in part, only with the approval of the manufacturer

2 Symbols and Terms Used

The symbols used in this operating manual have the following meanings:



Danger

Warns you of hazards that can lead to **injury of persons** or to **considerable material damage.**



Caution

Problems with the operating procedures **can occur** if this information **is not observed.**



No access for people with active implanted cardiac devices



Danger

Warns you of **electrical** hazards



Danger

Warns you of **electromagnetic fields** that can be generated during welding



These symbols prompt you to wear **personal protective clothing when working with the stud welding unit**.



This symbol prompts you to wear **ear protection**. **A loud bang > 90 dB (A) can occur during the welding process.**

©Walter Stauffenberg GmbH & Co. KG

All rights reserved – Reprinting, in whole or in part, only with the approval of the manufacturer



Tip

Cross-reference to **useful information** on the use of the stud welding machine



Cross-references in this operating manual are marked with this symbol or ***are printed in italics***



Fire hazard

Have a suitable fire extinguisher for the working area ready before starting work.

◆ **Work instruction**

– **List**

©Walter Stauffenberg GmbH & Co. KG

All rights reserved – Reprinting, in whole or in part, only with the approval of the manufacturer

Glossary

Automatic welding head:	Device for welding of welding elements
Capacitor:	Component for storage of electrical energy.
Light arc:	Independent gas discharge between two electrodes when the current is high enough. A whitish light is emitted in the process. The light arc allows very high temperatures to be generated.
Rectifier:	Electrical component that converts alternating voltage into direct voltage
Stud feeder:	Device for automatic feeding of welding elements
Stud welding gun:	Device for welding of welding elements
Stud welding machine:	Stud welding unit including stud welding gun
Stud welding unit:	Device for provision of the electrical energy for stud welding
Thyristor:	Electronic component for contact-free switching of high currents; switching takes place via the control input
Welding element:	Component such as stud or pin that is welded to the workpiece
Welding parameters:	Mechanical and electrical settings at the stud welding gun and at the stud welding unit (e.g. spring force, charging voltage)
Workpiece:	Components such as sheet metal or tubes to which the welding elements are to be fastened

All rights reserved – Reprinting, in whole or in part, only with the approval of the manufacturer

3 Scope of Supply

The **basic configuration** of your stud welding gun contains the following parts:

No. of pieces	Part	Type
1	Stud welding gun cable length 5 m	SWG-WG
1	Operating manual	SWG-WG
1	Toolkit	
optional		
	distance tube DIT Ø 25mm	
	distance tube DIT Ø 30mm	
	stud retainer	
	spacer size 1,1a,-8	

- Inspect the shipment for visible damage and completeness immediately on receipt.
- Report any transport damage or missing components immediately to the delivering shipping agent or the dealer (address, see page 2).

©Walter Stauffenberg GmbH & Co. KG
All rights reserved – Reprinting, in whole or in part, only with the approval of the manufacturer

4 Technical Data

Stud welding gun type SWG-WG
for ARC stud welding according to current standards

Welding range	M3 - M12, Ø 2 - 12 mm / *0.1 - 0.5 in*
Stud length	10 - 400 mm / *0.4 - 15.7 in* (depending on tripod) STAUFF stud 14mm / *0.6 in*
Stud material	Mild steel, other on request
Stud type	Any type or shape (special chucks if required)
Length compensation	3 mm / *0.1 in* automatic
Lift	Adjustment range 3 mm / *0.1 in,* lockable
Spring force	Adjustable, arresting
Welding cable	5 m / *197 in*
IP-Code	IP 20 (protect against humidity)
Workplace noise level	Up to 90 dB (A) may occur during welding
Ambient temperature limits	±0 °C bis +40 °C / *±32 °F bis +104 °F*
Dimension L x W x H	200 x 65 x 140 mm / *7.9 x 2.6 x 5.5 in* (without cable, without DIT)
Weight	0,8 kg / *1.8 lbs* (without cable)

All rights reserved – Reprinting, in whole or in part, only with the approval of the manufacturer

5 Intended Use

The stud welding gun has been designed exclusively for use with standardised stud welding elements. The use of any other elements will result in the desired strength of the welded joint being diminished.

The stud welding gun must only be connected to STAUFF stud welding units.

- Always check with the operating manual of your stud welding unit whether this stud welding gun may be used.

Observation of the operating manual of the stud welding unit being used is also part of the intended use.

5.1 Usage with STAUFF Clamps

For obtaining the maximum power rating of the weld joint, in usage with STAUFF Clamps, is a maximum height of the welded element of 13.0 mm observed.

In addition, the maximum torque rating of 6 Nm must be adhered in the application.

Specific series can limit the torque additionally.

In case of doubt, please contact STAUFF.

©Walter Stauffenberg GmbH & Co. KG
All rights reserved – Reprinting, in whole or in part, only with the approval of the manufacturer

6 Warranty

Please refer to the latest "General Terms and Conditions" for the scope of the warranty.

The warranty does not cover faults caused by e.g.

– Normal wear,
– Improper handling,
– Failure to observe the operating manual,
– Failure to observe the safety precautions,
– Use for other than the intended purpose, or
– Transport damage.

Warranty entitlement shall no longer be valid if modifications, changes or service and repair work is carried out by unauthorised persons or without the knowledge of the manufacturer. Invalidation of warranty entitlement shall also render the declaration of conformity invalid. The CE marking shall be declared invalid by the manufacturer.

We expressly point out that only spare parts and accessories or components approved by us may be used. The same applies likewise to installed units from our sub-suppliers.

6.1 Disclaimer

STAUFF provides SWG, devices and accessories with its production range for the use of attaching STAUFF Clamps according to DIN3015-1.

The STAUFF production range SWG, devices and accessories uses short-term stud welding with drawn-arc (procedure 784).

The executing welding personnel bears the responsibility for strength and quality of welding joints.

Please note especially chapter 5.1.

Welding personnel and coordination as well as further framework conditions must meet the requirements according to ISO 14555.

Beside the common examination agreement between the welding joint creator and the purchaser of the product there are the simplified or the recommended production control tests according to ISO 14555 to be executed.

All rights reserved – Reprinting, in whole or in part, only with the approval of the manufacturer

7 Design and Function

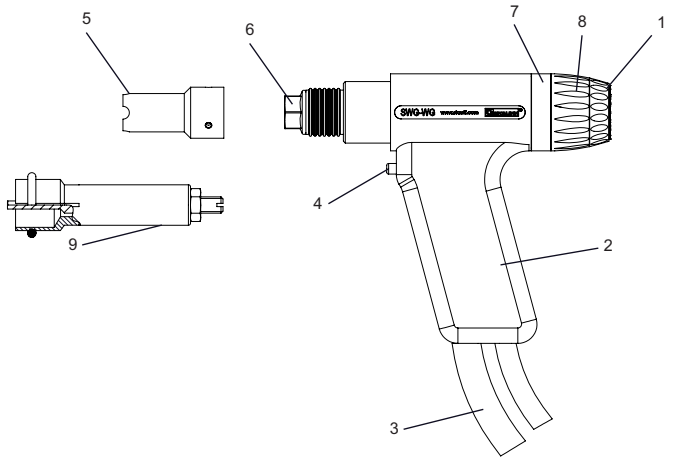

The stud welding gun SWG-WG is equipped with an integrated length adjustment for automatic compensation of length tolerance for the welding elements.

The body of the stud welding gun consists of a sturdy two-part **plastic housing (2)**.

The **control cable** and the **welding cable (3)** are connected through the welding gun handle to the welding gun.

Positioned at the front of the stud welding gun are the welding piston and the **retaining nut (6)** used to fix the manual chuck.

At the front of the stud welding gun, the **distance tube (DIT) (5)** is installed. Here the DIT is mounted.

At the rear, there is the mechanism for **lift adjustment (8)**, rotating **graduated ring (7)** and for **spring force adjustment (1)**.

At the front of the welding gun handle, the **welding gun trigger (4)** is installed. It is used to trigger the welding process.

The stud welding gun is supplied without a **stud retainer (SR) (9).**

The serial number is stamped on the welding gun handle.

Type plate

The type plate contains the following information:

– Manufacturer

– Type

©Walter Stauffenberg GmbH & Co. KG

All rights reserved – Reprinting, in whole or in part, only with the approval of the manufacturer

9 Welding Process

This stud welding gun may only be used for drawn arc stud welding.

◆ Please refer to the original operating manual of the connected stud welding unit for the welding procedure.

All rights reserved – Reprinting, in whole or in part, only with the approval of the manufacturer

9 Preparing the Stud Welding Gun

Prepare the stud welding gun by

– mounting the chuck
– mounting the DIT
– adjusting lift and spring force
– adjusting the penetration depth (protrusion).



◆ Do not connect the stud welding gun to the stud welding unit **until it has been prepared**.

In this way you can avoid any unintentional starting of the welding process.

©Walter Stauffenberg GmbH & Co. KG
All rights reserved – Reprinting, in whole or in part, only with the approval of the manufacturer

9.1 Mounting the chuck (SR) / Setting the Insertion Depth X (Protrusion)

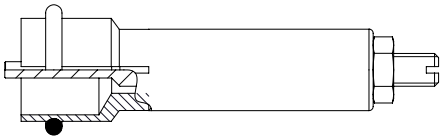

chuck

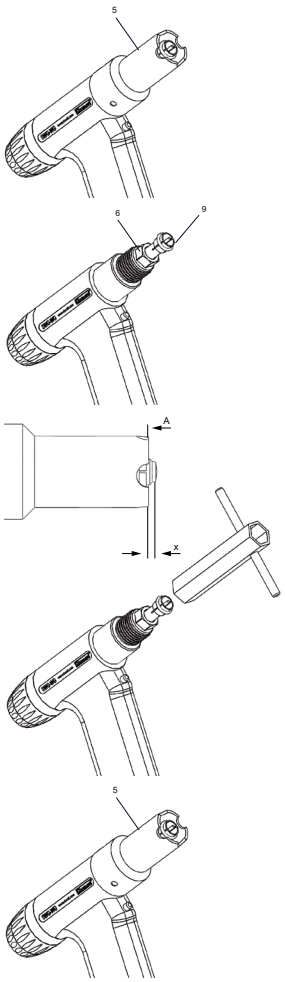

- ◆ Use the Allen key to remove the three screws of the positioning tube and remove the tube
- ◆ Remove the hexagon nut with the socket spanner and remove the stud holder
- ◆ Place a stud into new stud holder
- ◆ Insert the stud holder loosely into the front opening
- ◆ Loosely place the positioning tube
- ◆ Adjust insertion depth X by inserting the stud holder
- ◆ Carefully remove the positioning tube
- ◆ Tighten the hexagon nut with the socket spanner (Ensure not to change the position of the stud holder!)
- ◆ Place the positioning tube and tighten the three screws lightly

Allocation of adapter to fixing type of clamp bodies

Size	STANDARD
1	AGS-1
1a	AGS-1A
2	AGS-2
3	AGS-3
4	AGS-4
5	AGS-5
6	AGS-6
7	AGS-7
8	AGS-8
* Use of the AGS only in connection with DIT-SR6-SWG-WG25R	

All rights reserved – Reprinting, in whole or in part, only with the approval of the manufacturer

9.2 Setting the Welding Parameters

The insertion depth, lift and spring force are, among others, dependent on the workpiece and welding elements used and their diameters.

The specifications in the following table are guidelines.

◆ Select the applicable parameters for insertion depth X, lift and spring force for your workpiece.

Welding elements Material: 4.8 (suitable for welding) / A2-50 [4]	Diameter of welding elements				SWG-WG		
	metric		imperial (US)		Stud welding gun parameter [1]		
	Stud-diameter in mm	eff. diameter in mm	Stud-diameter in inches	eff. diameter in inches	Insertion depth X	Lift	Spring force
Material of workpiece: Mild steel (suitable for welding) / alloyed steel (suitable for welding) [4]							
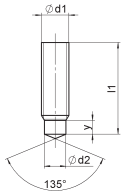	Ø d_1	Ø d_2	Ø d_1	Ø d_2			
RD (MR) [2]	M6	4.7	1/4“	0.187	2.0	1.0	6
RD (MR) [2]	M8	6.2	5/16“	0.275	2.0	1.0	6
RD (MR) [2]	M10	7.9	3/8“	0.312	2.5	1.2	6
RD (MR) [2]	M12	9.5	1/2“	0.435	3.0	1.4	6
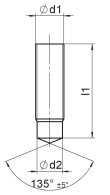	Ø d_1	Ø d_2	Ø d_1	Ø d_2			
PD/DD (MD) [2]	M6	5.35	1/4“	0.21	2.0	1.0	6
PD/DD (MD) [2]	M8	7.19	5/16“	0.28	2.5	1.2	6
PD/DD (MD) [2]	M10	9.03	3/8“	0.35	3.0	1.4	6
PD/DD (MD) [2]	M12	10.86	1/2“	0.43	3.0	1.4	6
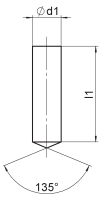	Ø d_1		Ø d_1				
UD / Pins [2]	3 (ISO)		#4 / 12 gage		1.5	1.0	6
UD / Pins [2]	4 (ISO)		#8		1.5	1.0	6
UD / Pins [2]	5 (ISO)		#10 / 3/16“		2.0	1.0	6
UD / Pins [2]	6		1/4“		2.0	1.0	6
UD / Pins [2]	8		5/16“		2.5	1.2	6
UD / Pins [2]	10		7/16“		3.0	1.4	6
UD / Pins [2]	12		1/2“		3.0	1.6	6
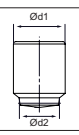	Ø d_1	Ø d_2	Ø d_1	Ø d_2			
IS	M6	8	*1/4“*	*5/16“*	1.5	1.6	5

[1] to be checked by test weldings

[2] Information and recommendations on this can be found in **DIN EN ISO 14555**.

[4] When welding on galvanized workpieces we recommend increasing the lift.

©Walter Stauffenberg GmbH & Co. KG

All rights reserved – Reprinting, in whole or in part, only with the approval of the manufacturer

Welding elements Material: 4.8 (suitable for welding) / A2-50 [4]	Diameter of welding elements				SWG-WG		
	metrisch		imperial (US)		Stud welding gun parameter [4]		
	Stud-diameter in mm	eff. diameter in mm	Stud-diameter in inches	eff. diameter in inches	Insertion depth X	Lift	Spring force
Material of workpiece: Mild steel (suitable for welding) / alloyed steel (suitable for welding) [4]							
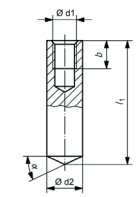		Ø d_1	Ø d_2	Ø d_1	Ø d_2			
	ID [2]	M6	10	1/4“	0.393	3.0	1.4	6
	ID [2]	M8	12	5/16“	0.472	3.0	1.6	6
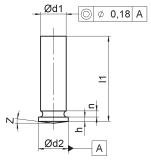		Ø d_1	Ø d_2	Ø d_1	Ø d_2			
	PS (US, IS) [3]	M3	4	1/8“	#8	2.0	1.2	6
	PS (US, IS) [3]	M4	5	5/32“	#10 / 3/16“	2.0	1.4	6
	PS (US, IS) [3]	M5	6	3/16“	1/4“	2.0	1.4	6
	PS (US, IS) [3]	M6	7	1/4“	0.21“	2.5	1.6	6
	PS (US, IS) [3]	M8	9	5/16“	0.28“	3.0	2.0	6
	PS (US, IS) [3]	M10	11	3/8“	0.35“	3.0	2.4	6

1) to be checked by test weldings

2) Information and recommendations on this can be found in **DIN EN ISO 14555**.

3) Information and recommendations on this can be found in **DVS 0902**.

4) When welding on galvanized workpieces we recommend increasing the lift.

The maximum adjustment values which can be set for the insertion depth X (3.5 mm) as well as the lift (3 mm) should not be exceeded.

The specified values apply for welding in welding position PA.

©Walter Stauffenberg GmbH & Co. KG

All rights reserved – Reprinting, in whole or in part, only with the approval of the manufacturer

Adjusting Lift

The adjustment piece for lift must not be turned by more than 360°.

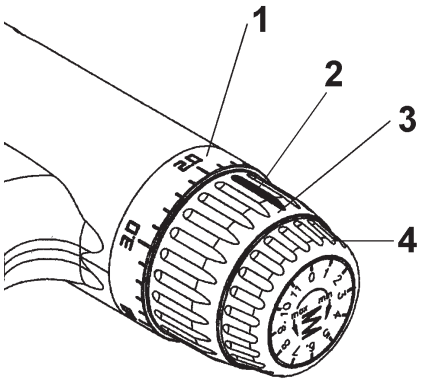

1 - End ring

2 - Marking

3 - Adjustment piece lift

4 - Adjustment piece spring force

- Place the stud welding gun perpendicularly onto the workpiece.
- Pull the adjustment piece for lift (3) to the rear out of the locking position.
- With the stud welding gun in contact with the workpiece, turn the adjustment piece for lift in clockwise direction until the welding piston allows no further movement in axial direction.
- Now turn the end ring (1) of the stud welding gun until the „0“ position is aligned with the marking (2) on the adjustment piece for lift.
- Now turn the adjustment piece for lift in counter-clockwise direction to the selected lift *(see table under point 9.2)*.

The lift can be adjusted in steps of 0.2 mm. (The empty space between 0 and 0.2 mm serves to mechanically balance out the lifting ring construction.)

- Now push the adjustment piece for lift forward again into the locking position.
- You can **reduce** the lift by turning the adjustment piece for lift **clockwise**.
- You can **increase** the lift by turning the adjustment piece for lift **counter-clockwise.**

©Walter Stauffenberg GmbH & Co. KG

All rights reserved – Reprinting, in whole or in part, only with the approval of the manufacturer

Adjusting Spring Force

The adjustment piece for spring force must not be turned by more than 360°.

- Turn the adjustment piece for spring force only until you feel a noticeable resistance.
- Never turn the adjustment piece further with force,

as otherwise mechanical parts of the stud welding gun may be damaged.

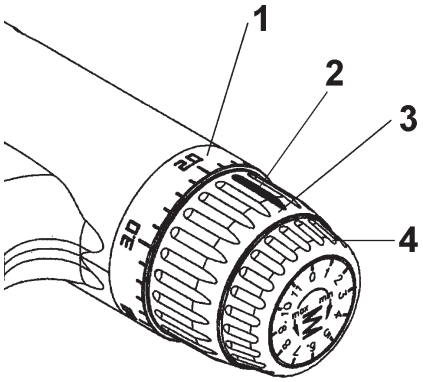

1 - End ring

2 - Marking

3 - Adjustment piece lift

4 - Adjustment piece spring force

- Turn the adjustment piece for spring force (4) up to the stop in „min“ direction. The position „0“ should be aligned with the marking (2) on the adjustment piece for lift (3).
- Now turn the adjustment piece for spring force to the selected value *(see table under point 9.2)*.

You thus determine the insertion rate.

The scale on the adjustment piece for spring force does not correspond to any particular dimensions.

- You can **reduce** the insertion rate of the welding piston by turning the adjustment piece for spring force **clockwise**.
- You can **increase** the insertion rate of the welding piston by turning the adjustment piece for spring force **counter-clockwise**.

All rights reserved – Reprinting, in whole or in part, only with the approval of the manufacturer

10 Welding



◆ **Work according to the *original operating manual of the STAUFF stud welding unit*.**



Danger if used other than for the intended purpose

◆ Use the stud welding gun only for ARC stud welding and only in combination with stud welding units from manufacturer:

Walter Stauffenberg GmbH & Co. KG
Im Ehrenfeld 4
58791 Werdohl
GERMANY



◆ Always check with the operating manual of your stud welding unit whether this stud welding gun may be used.

©Walter Stauffenberg GmbH & Co. KG
All rights reserved – Reprinting, in whole or in part, only with the approval of the manufacturer

12 Troubleshooting

Danger from insufficiently qualified operating personnel

- Carry out only the work described here on your stud welding unit or stud welding gun.
- Repairs may only be carried out by appropriately qualified personnel.
- Inform your dealer or your maintenance department.

Fault	Possible cause	Fault localisation	Fault remedy	Performance
Welding elements not firmly attached	Wrong welding parameters selected	Check adjusted parameters on stud welding unit	Change adjusted parameters	Trained personnel
		Check spring force of stud welding gun	Change adjusted parameters	Trained personnel
		Check lift of stud welding gun	Change adjusted parameters	Trained personnel
	Insertion speed of welding element too low	Check welding piston and linear bearing for ease of movement *)	Clean or replace *)	Qualified specialists
Burning marks at the welding element	Chuck defective	Check chuck for possible defects	Replace chuck	Trained personnel
	Lamellas of chuck are not pretensioned	Check lamellas of chuck	Try to bend lamellas if possible, otherwise replace chuck	Trained personnel
		O-rings existing? Check o-rings for possible defects	Replace o-rings	Trained personnel
Stud welding gun does not weld	Control cable defective (no trigger signal available on stud welding unit)	Check control cable for electrical flow at control cable sleeve (Pin 3 and 4) with pressed welding gun trigger *)	In case of no signal: Replace control cable *)	Qualified specialists
	Micro switch defective (with present contact signal on stud welding unit)	Check micro switch for electrical flow with pressed welding gun trigger *)	In case of no flow: Replace micro switch *)	Qualified specialists
	Welding current cable defective (no contact signal on stud welding unit)	Check, whether welding current cable is connected to stud welding unit in a technically correct way	Connect welding current cable	Trained personnel
		Check welding current cable for electrical flow *)	In case of no flow : Replace welding current cable and/or connecting cable *)	Qualified specialists

All rights reserved – Reprinting, in whole or in part, only with the approval of the manufacturer

Fault	Possible cause	Fault localisation	Fault remedy	Performance
Stud welding gun does not weld	Ground connection defective (no contact signal on stud welding unit)	Check, whether ground cable is connected to workpiece in a technically correct way	Connect ground cable	Trained personnel
		Check ground cable for electrical flow *)	In case of no flow: Replace ground cable *)	Qualified specialists
	Stud welding unit defective	Follow the instructions of the connected stud welding unit	Repair required	Factory service or authorised agencies
Stud welding gun does not lift, in spite of 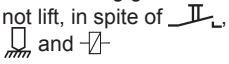 and	Short circuit of magnetic circuit of the stud welding gun	Meassure resistance value at control cable connector (18 Ω to 22 Ω) between Pin 1 and Pin 2 *)	Replace control cable connector, control cable and solenoid *)	Qualified specialists
	Solenoid defective	Meassure solenoid (18 Ω to 22 Ω) *)	Replace solenoid *)	Qualified specialists
No  display	Magnetic circuit interrupted	Meassure resistance value at control cable connector (18 Ω to 22 Ω) between Pin 1 and Pin 2 *)	Replace solenoid or control cable *)	Qualified specialists



Work marked with *) may only be carried out by qualified electricians!

- Please contact our Service department if none of the measures described remedies the situation.
- Please use the form „Service & Support“ in the annex to send in the stud welding gun.

©Walter Stauffenberg GmbH & Co. KG

All rights reserved – Reprinting, in whole or in part, only with the approval of the manufacturer

12 Maintenance and Care



Electric shock hazard

- Never perform maintenance and service work on your stud welding gun while it is connected to the stud welding unit
- Prior to this disconnect the stud welding gun from the stud welding unit.



Danger from insufficiently qualified operating personnel

- Carry out only the work described here on your stud welding gun.
- Repairs may only be carried out by appropriately qualified personnel.
- Inform your dealer or your maintenance department.

12.1 Cleaning

- Clean the casing of your stud welding gun with a slightly damp washcloth, when necessary.



- **Do not use solvents for cleaning.**

These may damage plastic components.

All rights reserved – Reprinting, in whole or in part, only with the approval of the manufacturer

12.2 Inspection and Tests

- ◆ Inspect the chuck before every use.
- ◆ Replace the chuck if you discover burning marks on the welding element and/or on the chuck.
- ◆ Work here in accordance with *point 9.1 „Mounting the chuck“* in this manual.
- ◆ Before every use, inspect the bellows on the front part of the stud welding gun for proper seating and/or damage.



- ◆ **Never work with damaged or incorrectly seated bellows**.

  This will contribute to a long service life of your stud welding gun.
- ◆ Inform your dealer or maintenance department if you discover any damage.

- ◆ Before every use, check that the type designations and adjustment aids on the stud welding gun are still legible.
- ◆ Clean the type plates in the event of soiling.
- ◆ Replace any type plates that are damaged or no longer legible.

©Walter Stauffenberg GmbH & Co. KG
All rights reserved – Reprinting, in whole or in part, only with the approval of the manufacturer

13 Storage

- ◆ Store the stud welding gun in a safe and dust-free location when not in use.
- ◆ Protect the stud welding gun from moisture and metallic contamination.



- ◆ Store the stud welding gun only under the following ambient conditions.

Storage temperature:

-5 °C to +50 °C (23 °F to 122 °F)

Relative humidity:

0 % - 50 % at +40 °C (104 °F)
0 % - 90 % at +20 °C (68 °F)

14 Disposal

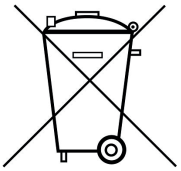

- ◆ Dispose of the stud welding gun only via the manufacturer or a specialist disposal company.
- ◆ Never dispose of the stud welding gun in the domestic refuse.

All rights reserved – Reprinting, in whole or in part, only with the approval of the manufacturer

Declaration of Incorporation of partly completed Machinery

to Directive 2006/42/EC, Annex II 1 B
(Original Declaration of Incorporation)

Herewith the manufacturer

Walter Stauffenberg GmbH & Co. KG
Im Ehrenfeld 4
58791 Werdohl
GERMANY
Tel. +49 (0) 23 92 / 916 - 0
Fax +49 (0) 23 92 / 25 05

declares for the following product

Machine information: Stud welding gun
Type: SWG-WG
Year of manufacture: 2015

that the following essential requirements of the above mentioned Directive – including changes to the Directive to be applied at the moment of this declaration – were applied and fulfilled:

Annex I, Article 1, 1.1.2, 1.1.3, 1.1.5, 1.1.6, 1.1.7, 1.2.1, 1.2.2, 1.2.3, 1.2.4.1, 1.2.6, 1.3.1, 1.3.2, 1.3.3, 1.3.4, 1.3.7, 1.3.8, 1.3.9, 1.4.1, 1.4.2.1, 1.5.1, 1.5.2, 1.5.4, 1.5.5, 1.5.6, 1.5.8, 1.5.10, 1.5.11, 1.5.15, 1.5.16, 1.6.1, 1.6.2, 1.6.3, 1.6.4, 1.7.1.1, 1.7.2, 1.7.3, 1.7.4,

that special technical documentation was compiled in accordance with Part B of Annex VII of the above mentioned regulation and will be transmitted, in response to a reasoned request by the national authorities as follows:

The above mentioned documents will be transmitted by e-mail as a data file in German language.

that this partly completed machinery must not be put into service until the final machinery into which it is to be incorporated has been declared in conformity with the provisions of the Directive, where appropriate.

that this incomplete machine complies with corresponding regulations of the following additional EU Directives, including any changes to be applied at the moment of this declaration:

„Electromagnetic compatibility“ 2014/30/EU

Protection targets of the low voltage regulation were kept to appendix I, no. 1.5.1 of the machine regulation.

Persons who are based in the European community and who are authorised to compile the technical documentation:

Name: Walter Stauffenberg GmbH & Co. KG Address: see manufacturer

Werdohl, 21.03.2016
Place of issue, Date

Carsten Krenz (General Manager STAUFF)

©Walter Stauffenberg GmbH & Co. KG
All rights reserved – Reprinting, in whole or in part, only with the approval of the manufacturer

Service & Support

Please enclose a copy of the completed form with the repair number provided by STAUFF when sending the repair item to us! Repairs without a repair number cannot be processed. For processing of warranty claims, please enclose a copy of the delivery note/invoice with the serial number.

Repair number

(given by STAUFF)

Company:

Name / Surname:

Street:

City, State and ZIP/Postcode:

Country:

Phone & Fax:

E-mail address:

Stud welding unit / stud welding gun type of model:

Serial number (enclose document):

Date of purchase (enclose document):

Purchased at distributor:

Detailed descriptions of errors:

Service & Support may be done up to the value of EUR _____ without quotation:	☐ Yes	☐ No
Could you find any damage / burn marks		
on the cables:	☐ Yes	☐ No
on chucks:	☐ Yes	☐ No
Are all plug and screw connections tightly fastened *:	☐ Yes	☐ No
Are there any burn marks on plug or screw connections:	☐ Yes	☐ No
Is there any other visual damage (e.g. cracks, dents):	☐ Yes	☐ No
Have you checked the fuses:	☐ Yes	☐ No

Default on the display of the stud welding unit:

SC			
			

Which LED´s are illuminated (please mark with a cross)?

Please e-mail or fax this form to sales@stauff.com or fax: +49 (0) 23 92 / 25 05.
Or use our online form at: www.stauff.com/service-swg
In case a repair is necessary a repair number will be given!

* See also operating manual chapter „Connection“

©Walter Stauffenberg GmbH & Co. KG

All rights reserved – Reprinting, in whole or in part, only with the approval of the manufacturer

Index

A

accessories 12
adjustment piece lift 23
airborne particulates 7
automatic welding head 11

B

bang 7
basic configuration 12

C

capacitor 11
chuck, mounting 19
cleaning 28
clothing, non-flammable 8
control cable 16

D

danger from incorrect use 6
Declaration of Incorporation 30
disposal 29

E

ear protection 9
electrical hazards 9
electromagnetic fields 9

F

face plate 16
fire extinguisher 7
fire hazard 7
form „Service & Support“ 26, 31
full-ear hearing protection 8
fumes, harmful to health 7

G

glossary 11
goggles with visor 8
graduated ring 16

H

hazards for the machine 9
hazards for the operator 9
heart pacemaker 7, 9
helmet 8

I

insertion depth 21
intended use 14

L

lift 21
lift adjustment 16, 22
light arc 11

M

maintenance and care 27

O

operating manual 12

P

protective apron 8
protective equipment 8
protective equipment, personal 9
protective gloves 8

R

rectifier 11
retaining nut 16

S

safety goggles 9
safety goggles with sight glass 8
safety precautions 6
scope of supply 12
serial number 16
setting the insertion depth 19
spring force 20
spring force adjustment 16, 23
storage 29
storage temperature 29
stud feeder 11
stud welding gun 11
stud welding machine 11
stud welding unit 11
symbols used 9

T

troubleshooting 25
type plate 16

©Walter Stauffenberg GmbH & Co. KG

All rights reserved – Reprinting, in whole or in part, only with the approval of the manufacturer

W

warranty entitlement 15
welding cable. 16
welding element. 11, 14
welding gun, design. 16
welding gun trigger 16
welding parameters. 11, 20
workpiece 11

All rights reserved – Reprinting, in whole or in part, only with the approval of the manufacturer

Operating Manual SWG-WG

Contact
Walter Stauffenberg GmbH & Co. KG
Im Ehrenfeld 4 • 58791 Werdohl • Germany
Phone: +49 23 92 916 0
Fax.: +49 23 92 916 150
E-mail: sales@stauff.com
www.stauff.com