# SPECIAL

## FLUID TECHNOLOGY OF THE FUTURE



IT PAYS TO MAKE THE RIGHT CHOICE

## TUBES OR HOSES IN A HYDRAULIC LINE SYSTEM?



In which areas of a hydraulic system should tubes be used? And where are tubes the better solution? This decision impacts the service life and functional capability of mobile and stationary hydraulic systems while also being relevant to the extent of maintenance and service work. Most systems use hoses as well as metal tubes. The deciding factor are the conditions that the respective line sections are exposed to within the system.

**Boris Mette,** *Head of Marketing Communications at Stauff*

As an application engineer and customer advisor at Stauff Germany, André Degen makes the following recommendation: "When designing a plant or machine, it is crucial to consider the hydraulic line system from the outset." He explains that whether this is a tube or hose has to be clarified in as much detail as possible for each plant section to help avoid costly subsequent changes. There are only a few fundamental differences, which are clear decision-making criteria. In almost all cases, the pros and cons of both line options have to be considered individually.

## STATIC VERSUS DYNAMIC

One rule of thumb is: Metal tubes are the right choice for permanently installed machines with only few moving components. Even small movements of the connected parts, however, preclude the use tubes. Although a tube would initially provide a tightly sealed connection, the movement strains the end connections, leading to leaks and machine downtime in the long term.

Hoses – with the appropriate fittings and couplings – on the other hand are suitable for dynamic applications where the elements to be connected can move relative to each other on one or both sides. Hoses are also recommended if strong vibrations occur throughout the entire plant during operation. Not only are the tubes more resistant to vibrations as such, they also interrupt the vibrations in the system instead of passing them through directly like static tubes. This also reduces the noise level.

> **MAINTENANCE AND SERVICE: ANY INTERVENTION HARBOURS A CERTAIN POTENTIAL OF HUMAN ERROR**

## EASY AND STRAIGHTFORWARD INSTALLATION

Thanks to their long service life and high durability, tubes require less maintenance and service work. This is an advantage in particular in areas that are difficult to access. But this rule has its limits. The impact of chemicals, abrasion, UV radiation, heat and other factors can diminish the benefits of metal tubes. High humidity or contact with aggressive chemicals, for example, can increase the incidence of corrosion on tubes and fittings.

The service life of hoses is limited by the material itself, requiring consistent service work and regular replacements. A line system made up completely of hoses would therefore result in extensive machine downtime.

In addition to this, maintenance and service work itself is error-prone. "Any intervention in the system brings a certain potential of human error with it," says Degen. "Here at Stauff, we focus on easy and straightforward installation when we develop our components. Short maintenance and replacement cycles additionally contribute to the safety and availability of a plant." Degen therefore advises design engineers to always take the operators' situation into account as well. The safety of a hydraulic system is determined during the design phase, on the assembly line and finally during the handling at the place of use, explains Degen.

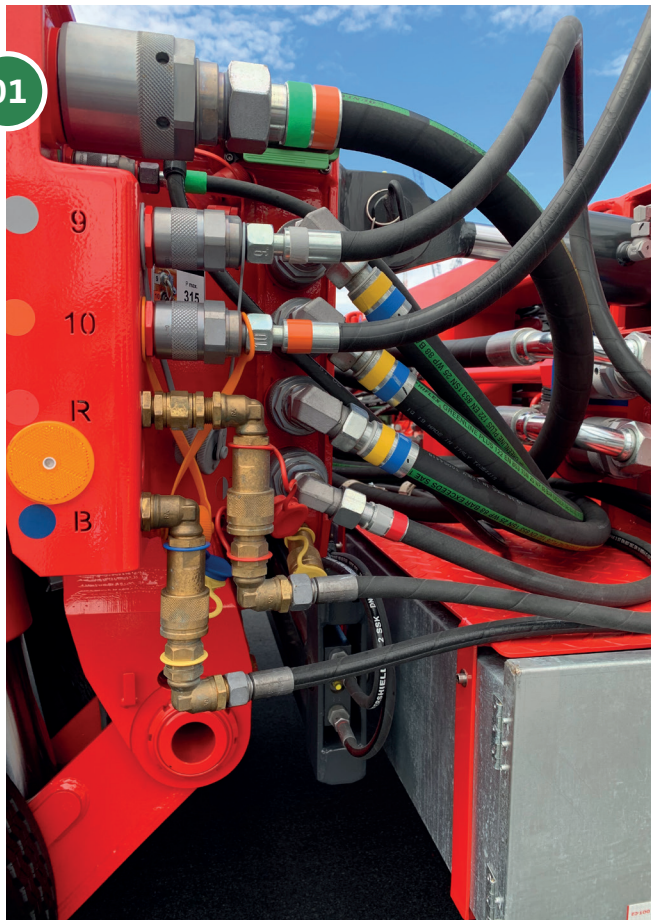






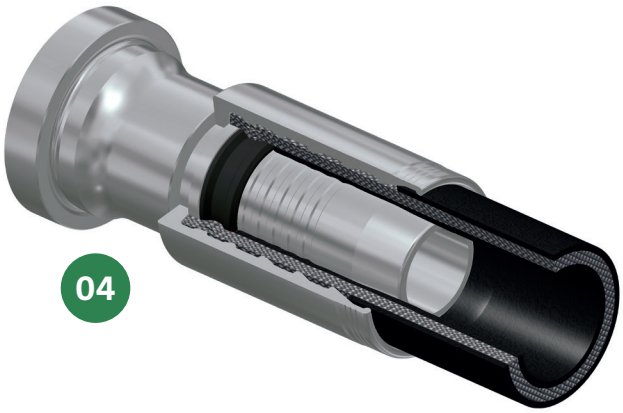

## SAVING WEIGHT – THE RIGHT WAY

Some applications require lightweight design. In a comparison between tubes and hoses based on their nominal diameters, a steel or stainless steel tube is typically lighter than a hose. But as hoses are measured by their inner diameter and tubes by their outer diameter, comparisons based on nominal diameters can be misleading.

The inner diameter is the crucial factor for determining the flow diameter and flow rate. This means that the comparison has to use tubes and hoses with the same inner diameters for the required pressure levels, rather than with the same nominal diameters. The weight comparison then often goes in favour of the hoses. Tubes can be the lighter solution, however, when different steel types with higher pressure levels, such as C-1021, are considered, which allow for tubes with thinner walls. "All product specifications should be taken into account when it comes to saving weight," recommends André Degen.

## AVAILABLE LENGTHS

Hoses are available in significantly longer lengths than conventional metal tubes. Some hose types can be manufactured with a continuous length of 50 m and more, while thermoplastic hoses can even be significantly longer. Metal tubes, on the other hand, are typically supplied in 6-m sections. Longer tubes have to be ordered with a longer lead time and they are more expensive. If longer lines are required, individual tube sections can be connected with the appropriate tube connection systems. Once again, it is important to consider the situation at hand.

One example: If strong vibrations are generated in a system, Degen recommends the Stauff Form tube connection system: "One tube end is formed in such a way that the tightening of the union nut produces a positive and therefore particularly vibration resistant connection." In other cases, a cutting ring fitting with or without a soft seal can be the right solution.

**01** **Dynamic hydraulic hose solution on an agricultural machine, including the appropriate couplings and fittings from Stauff**

**02** **The correct bend is one of the crucial factors of hydraulic hoses, as the wrong bending radius can result in leaks, reduced performance or serious accidents**

**03** **Automated bending control and monitoring: Stauff offers ready-to-install tubes in all conceivable shapes and up to a length of 6 m, made of standard steel, stainless steel, copper or speciality materials – in all common metric tube diameters and wall thicknesses**

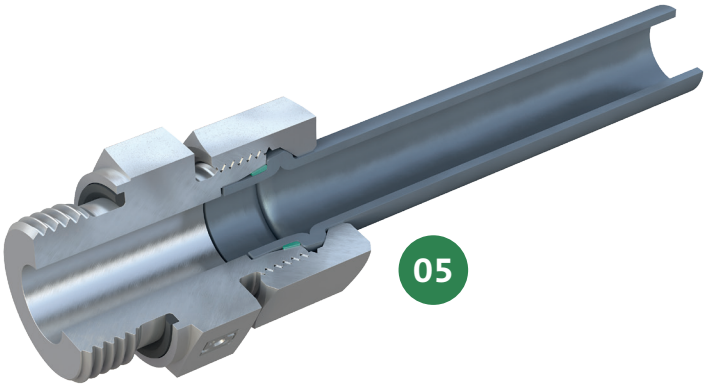


**04** Ecovos hydraulic hose fittings from Stauff feature a particularly long hose nipple; this damping zone reduces the stress in the area of the sealing profile

**05** Stauff Form Evo tube forming system: A machine forms one tube end such that the tightening of the union nut creates a positive and therefore particularly vibration resistant connection

## FINDING THE BEST SOLUTIONS



André Degen, application engineer and customer advisor at Stauff Germany

André Degen is always met with great interest when visiting machine manufacturers and line builders throughout Europe with the Stauff Liner. His advice goes far beyond the simple question of "tube or hose". Together with the responsible Stauff sales representative and the specialist dealer involved, he is part of a strong consulting trio that considers the entire process of planning and implementing a hydraulic line system. "From a technical point of view, there are often several options, for example for attaching tubes or hoses or for selecting the tube connection system," says Degen. "The collaboration with our customers is perfect when commercial, logistics and technical advice go hand in hand."

## CONSIDERING PRESSURE SPIKES

Hose diameters expand under pressure, which reduces the hose length. A certain level of play is therefore required for the length so that hoses are not pulled out of the connection even during spontaneous pressure spikes. Uncontrolled hose ends whipping about and spilled hydraulic fluids can have severe consequences for users and for the environment.

The connection between hose and fitting is an important factor for the operational safety of hoses. The Ecovos hose fitting from the Stauff range, for example, is a two-part press fit system with a particularly long hose nipple. This creates a larger connection surface area for reliably absorbing mechanical loads from movement, pressure changes or vibrations. Hydraulic hoses with Ecovos are also particularly well protected against torsion, i.e. twisting along the longitudinal axis.

> LINE SYSTEMS SHOULD BE PLANNED ALREADY DURING THE DESIGN PHASE

## BENDING RADIUS AS A FACTOR

Tubes can have much tighter bends than hoses. Most lines are produced with only one bending radius for the entire system. Specialist tube bending centres, however, can also implement more complex line layouts. These lines with multiple bends are then guided through installation spaces of different sizes while offering a long service life.

Stauff runs its own tube bending centres at nine of its 17 international sites. Seamless precision tubes are bent from standard steel, stainless steel, copper and various speciality materials in all common metric tube diameters and wall thicknesses. The tube ends can be formed ready for installation (Stauff Form system) or cutting rings with union nuts can be pre-installed with automated control and monitoring.

Customers can request testing to individual specifications or standards, line cleaning for specific cleanliness levels and other services. "More and more OEMs are having entire assemblies produced and delivered directly to the assembly line by our international system partners," Degen reports. And the Stauff Line concept is successful: The company takes on the responsibility for hydraulic line systems – from individual components to ready-to-install lines.

## COMPLEX PLANNING

Steel generally has a higher UV radiation resistance than the rubber components typically used in hose casings. Hoses with specially developed UV resistant thermoplastic casing materials should therefore be used for applications in mobile hydraulic systems. If a hydraulic system has a tendency to overheat, the better heat dissipation of tubes can provide an advantage. If the system runs in a cool environment, however, hoses offer better insulation for the hydraulic fluid, allowing the operating temperature to be reached more quickly.

These and many other criteria – from electrical conductivity and corrosion resistance to the hydraulic medium or aggressive substances to availability and price – have to be considered when it comes to the "hose or tube" question. André Degen summarises: "The planning of a line system is complex. But individually assessing the different factors pays off in the end. It increases plant reliability and optimises the cost structure already during the design phase."

**Images:** *Stauff*

www.stauff.com